Extruded
Hollow Core
PRESTRESSED CONCRETE SLAB

10" X 48" Section
2" Structural Topping

Safe Load Table

UNIFORMLY DISTRIBUTED SUPERIMPOSED SERVICE LOAD IN PSF

Standard Designation	Strands No. & Size	Strand Area Sq. In.	M Ft.-Kips per Unit	ϕM_n Ft.-Kips Per Unit	Span Length (l) in Ft.																									
					15	**16**	**17**	**18**	**19**	**20**	**21**	**22**	**23**	**24**	**25**	**26**	**27**	**28**	**29**	**30**	**31**	**32**	**33**	**34**	**35**	**36**	**37**	**38**	**39**	**40**
T1048-130	6 - 6/10	1.302	162.0	207.2	771	719	672	631	594	561	516	464	418	378	343	312	284	259	237	217	198	182	167	153	140	129	117	105	93	83
T1048-117	4 - 6/10 & 2 - 1/2	1.174	150.8	191.1	771	719	672	631	590	526	470	422	380	343	311	282	256	233	213	194	177	162	148	135	124	113	101	89	79	**69**
T1048-92	6 - 1/2	0.918	128.4	156.3	771	692	605	532	470	417	372	332	298	268	241	218	197	178	161	146	132	120	108	98	88	78	**68**	**58**		
T1048-61	4 - 1/2	0.612	101.6	110.0	540	466	404	353	309	272	240	213	189	167	149	132	117	104	92	81	72	63	55							

controlled by: ultimate shear service

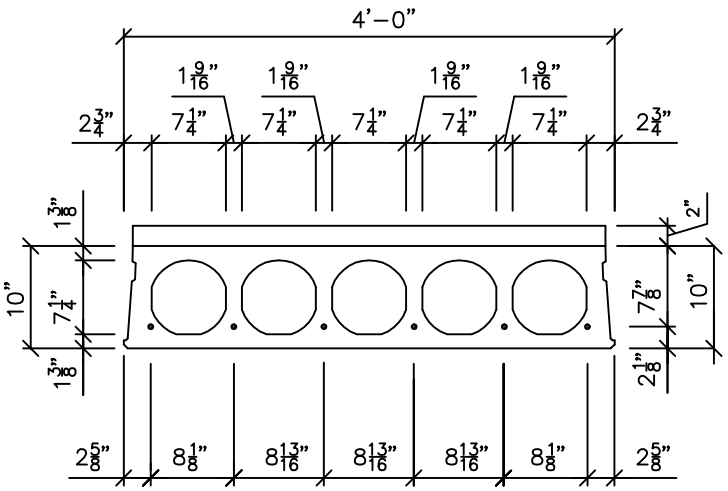

A =	263.65	in^2	f'_c =	9000	psi
A_c =	323.51	in^2	f'_{ci} =	3500	psi
b_w =	10.9714	in	f_{pu} =	270	ksi
I_g =	3258.09	in^4			
I_{gc} =	4989.99	in^4			
y_b =	5.074	in			
y_{bc} =	6.168	in			

NOTES:

1) Grouted weight of topped structural unit is 95 psf or 380 plf based on concrete unit weight of 154 pcf.
2) Design is based on ACI Standard, "Building Code Requirements for Reinforced Concrete (ACI318)."
3) No shear reinforcement is required for the tabulated loads to the right of the heavy stepped line.
4) Tabulated loads are based on U=1.2D+1.6L and with all load superimposed on the structural section considered as live load.
5) Tabulated loads in the blue area may be achieved by adding partial concrete corefill.
6) Tabulated loads in yellow are controlled by permissible flexural tension at service loads.
7) Tabulated loads in bold font have deflections in excess of L/360.
8) All strand stressed to 70% of ultimate.
9) For longer spans and conditions not covered in the load table, consult Molin.

Molin Concrete Products Company • 415 Lilac Street • Lino Lakes, MN 55014
Office: 651.786.7722 • 800.336.6546 • Fax: 651.786.0229
www.molin.com • e-mail: info@molin.com