Flexicore

Hollow Core

PRESTRESSED CONCRETE SLAB

8" X 24" Section

Safe Load Table

UNIFORMLY DISTRIBUTED SUPERIMPOSED SERVICE LOAD IN PSF

Standard Designation	Strands No. & Size	Strand Area Sq. In.	M Ft.-Kips per Unit	ϕM_n Ft.-Kips Per Unit	Span Length (l) in Ft.																		
					15	**16**	**17**	**18**	**19**	**20**	**21**	**22**	**23**	**24**	**25**	**26**	**27**	**28**	**29**	**30**	**31**	**32**	**33**
824C-60*	4 -1/2	0.612	35.9	60.3	370	344	321	301	283	267	250	223	199	178	160	144	129	116	104	94	84	75	67
824C-58	4 -1/2	0.576	36.4	53.8	370	344	321	301	283	267	252	227	202	181	163	146	131	118	106	96	86	77	69
824C-50	2 -1/2 & 2 -7/16	0.504	33.1	48.1	370	344	321	301	283	253	225	200	178	159	142	127	113	101	91	81	72	**64**	**57**
824C-43	4 -7/16	0.432	29.8	42.1	370	344	321	282	249	220	195	173	153	136	121	107	95	85	75	66	59	**52**	
824C-38	2 -7/16 & 2 -3/8	0.376	27.3	37.2	370	321	279	244	215	190	168	149	133	118	105	92	81	72	63	55			
824C-32	4 -3/8	0.320	24.7	32.2	315	272	236	206	180	158	140	123	109	97	86	76	68	59	51				
824C-29	2 -1/2	0.288	23.3	29.2	282	243	210	183	160	140	123	108	95	84	74	65	57	50					

controlled by: ultimate shear service

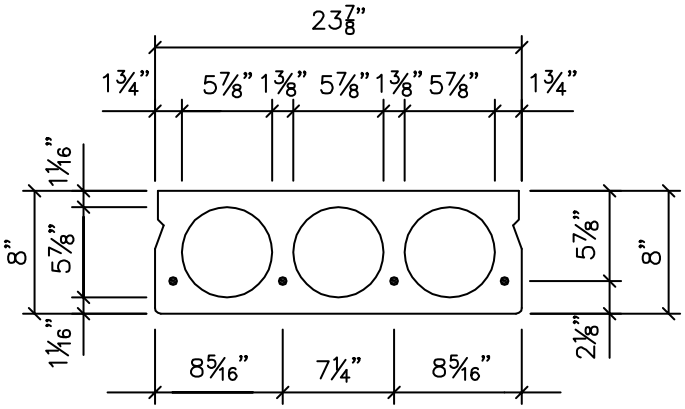

A =	109.7	in^2	f'_c = 6000	psi
b_w =	6.25	in	f'_{ci} = 3500	psi
I_g =	843	in^4	f_{pu} = 250	ksi
y_b =	4.000	in	f_{pu}* = 270	ksi

* Strand Stressed to 60% of Ultimate

NOTES:

1) Grouted weight of structural unit is 57 psf or 114 plf based on concrete unit weight of 150 pcf.
2) Design is based on ACI Standard, "Building Code Requirements for Reinforced Concrete (ACI318)."
3) No shear reinforcement is required for the tabulated loads to the right of the heavy stepped line.
4) Tabulated loads are based on U=1.2D+1.6L and with all load superimposed on the structural section considered as live load.
5) Tabulated loads in the blue area may be achieved by adding shear reinforcing.
6) Tabulated loads in yellow are controlled by permissible flexural tension at service loads.
7) Tabulated loads in bold font have deflections in excess of L/360.
8) All strand stressed to 70% of ultimate.
9) For longer spans and conditions not covered in the load table, consult Molin.

Molin Concrete Products Company • 415 Lilac Street • Lino Lakes, MN 55014
Office: 651.786.7722 • 800.336.6546 • Fax: 651.786.0229
www.molin.com • e-mail: info@molin.com