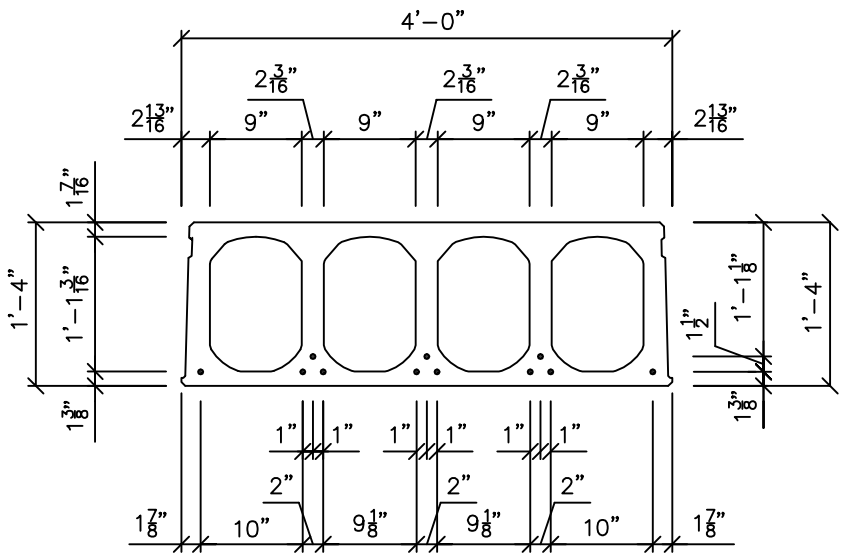

16" LIGHT EXTRUDED PLANK

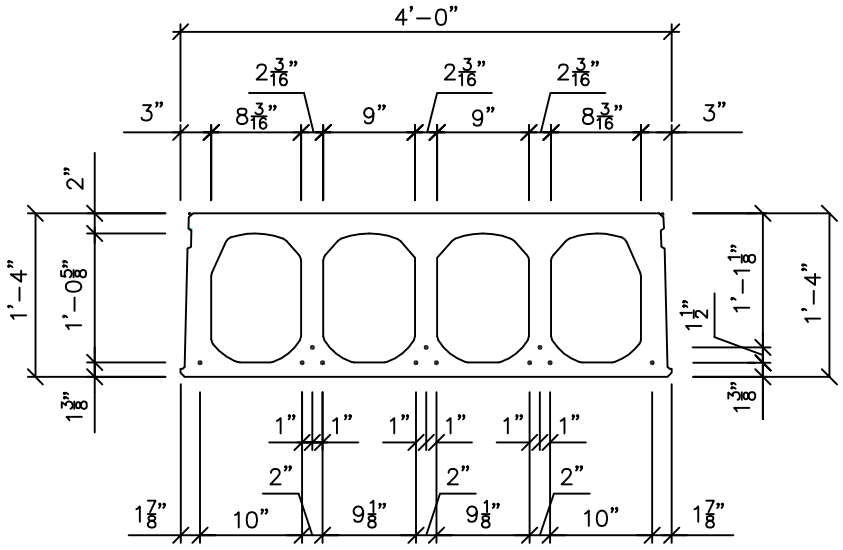

16" HEAVY EXTRUDED PLANK

GENERAL CONTRACTOR NOTE:

1) While field core drilling for making openings for plumbing lines, care must be exercised not to cut strand in plank. Relocate openings considering the strand location indicated in the cross–sections.

2) No mechanical openings to be made without prior approval.